| NO. OF CCTS | DIMN. "A" | DIMN. "B" |
|---|---|---|
| 2 | ( 5.08 ) .200 | ( 2.54 ) .100 |
| 3 | ( 7.62 ) .300 | ( 5.08 ) .200 |
| 4 | (10.16 ) .400 | ( 7.62 ) .300 |
| 5 | (12.70 ) .500 | (10.16 ) .400 |
| 6 | (15.24 ) .600 | (12.70 ) .500 |
| 7 | (17.78 ) .700 | (15.24 ) .600 |
| 8 | (20.32 ) .800 | (17.78 ) .700 |
| 9 | (22.86 ) .900 | (20.32 ) .800 |
| 10 | (25.40 ) 1.000 | (22.86 ) .900 |
| 11 | (27.94 ) 1.100 | (25.40 ) 1.000 |
| 12 | (30.48 ) 1.200 | (27.94 ) 1.100 |
| 13 | (33.02 ) 1.300 | (30.48 ) 1.200 |
| 14 | (35.56 ) 1.400 | (33.02 ) 1.300 |
| 15 | (38.10 ) 1.500 | (35.56 ) 1.400 |
| 16 | (40.64 ) 1.600 | (38.10 ) 1.500 |

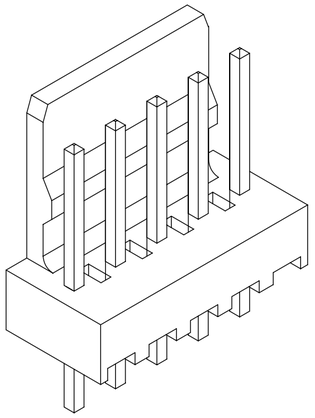

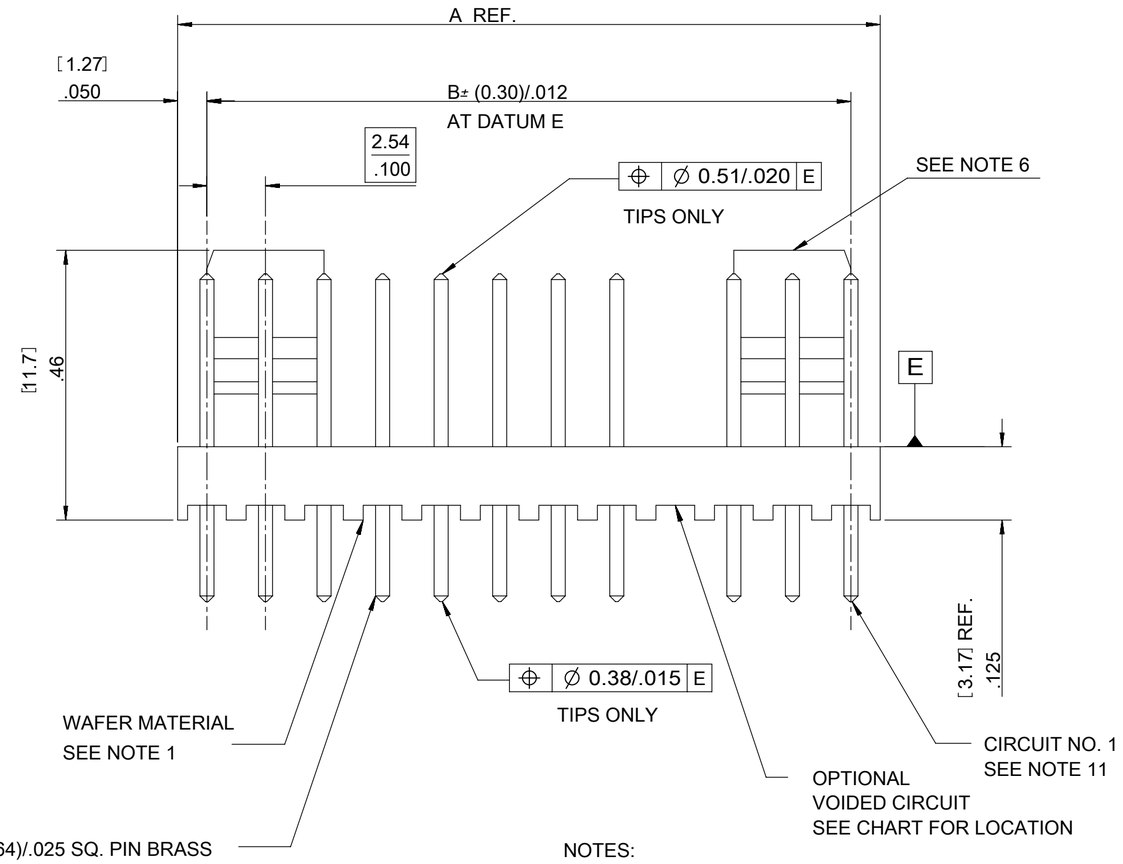


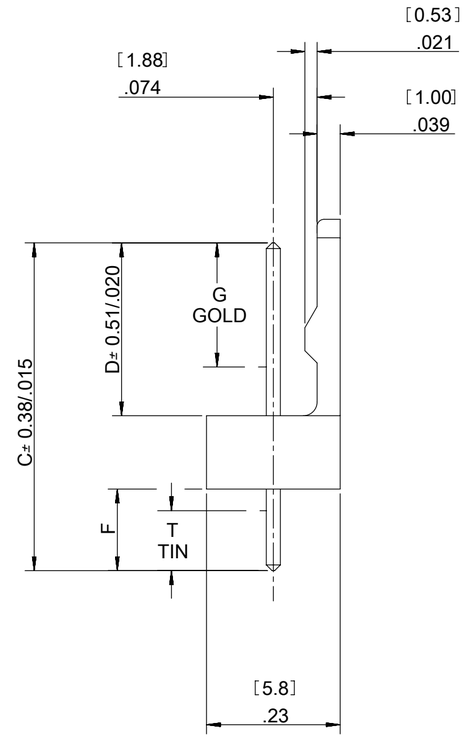


AE-6410- N * (*) - *

- NO. OF CCTS
- WAFER ASSY. OPTION
- PLATING TYPE
- VOIDED CIRCUIT CODE NO. CORRESPONDS TO CIRCUIT NO. VOIDED. MULTIPLE VOIDS START WITH 51 BLANK = NONE

NOTES:

1. WAFER MATERIAL: NYLON, UL94V-0, PIN MATERIAL: BRASS
2. FINISH:
   154 = OVERALL TIN: 0.00254/.00100 MIN. OVER 0.00127/.000050 MIN. NICKEL
   197 = OVERALL REFLOWED MATTE TIN: 0.00152/.00060 MIN. OVER 0.00127/.000050 MIN. NICKEL
   222 = OVERALL MATTE TIN: 0.00254/.00100 MIN. OVER 0.00127/.000050 MIN NICKEL
   228 = SELECT GOLD 0.00076/.000030 MIN., SELECT MATTE TIN: 0.00254/.00100 OVER 0.00127/.000050 MIN NICKEL
   231 = SELECT GOLD 0.00127/.000050 MIN., SELECT MATTE TIN: 0.00254/.00100 OVER 0.00076/.000030 MIN NICKEL
   241 = SELECT GOLD 0.00051/.000020 MIN., SELECT MATTE TIN: 0.00254/.00100 OVER 0.00076/.000030 MIN NICKEL
3. THIS PART CONFORMS TO MOLEX PROD. SPEC. PS-99020-0088.
4. PACKAGING: PER PK-6410-002
5. PIN SOLDERABILITY PER MOLEX SPEC. SMES-152.
6. SINGLE RAMP ON 2-6 CCTS TWO RAMPS ON 7-16 CCTS, AS SHOWN.
7. PIN PUSH OUT FORCE: (0.907 Kg)/2lbs MIN.
8. PCB THICKNESS 1.6MM
9. WAFERS STACKABLE END TO END WITH (2.54)/.100 BETWEEN END PINS
10. THIS PART CONFORMS TO CLASS B REQUIREMENTS OF COSMETIC SPECIFICATION PS-45499-002.
11. CIRCUIT 1 DESIGNATION IS USED TO DEFINE VOID LOCATION. CIRCUIT 1 MAY OR MAY NOT LINE UP WITH CIRCUIT 1 ON THE MATING HOUSING.

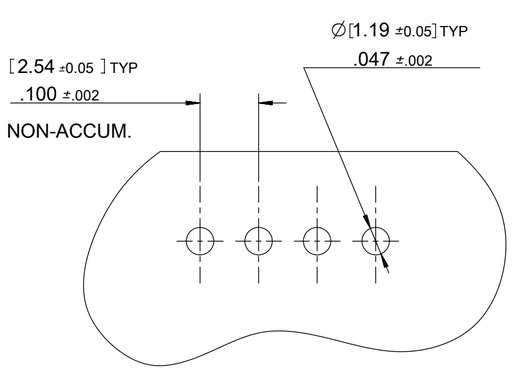


RECOMMENDED P.C.B. HOLE DIMENSIONS
(STANDARD SERIES)

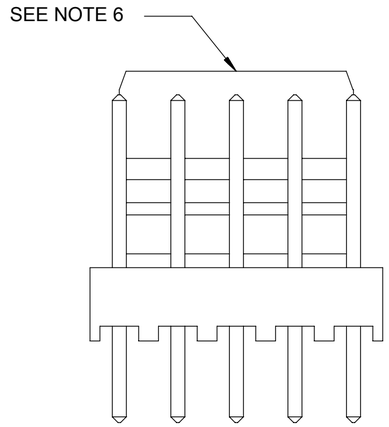


EM-6410-010
EM-6410-12A
EM-6410-12C

| RELEASE STATUS | P1 | RELEASE DATE | 14.06.2016 16:45:46 |
|---|---|---|---|

QUALITY SYMBOLS: FA = 0; FE = 0; FD = 0; ▼ = 0; C = 0; ☒ = 0; ■ = 0; C = 0

ADD 46999-0696 — 2016/01/21
EC NO: 104930 — 2016/05/31
DRWN: MKIPPER — 2016/06/14
CHKD: JDFOX
APPR: FSMITH
REV: BC1

GENERAL TOLERANCES (UNLESS SPECIFIED)

| | MM | INCH |
|---|---|---|
| 4 PLACES | ± | ± |
| 3 PLACES | ± | ± 0.01 |
| 2 PLACES | ± 0.25 | ± 0.014 |
| 1 PLACES | ± 0.35 | ± |
| 0 PLACES | ± | ± |

ANGULAR TOL ± 0.5

DRAFT WHERE APPLICABLE MUST REMAIN WITHIN DIMENSIONS

THIS DRAWING CONTAINS INFORMATION THAT IS PROPRIETARY TO MOLEX ELECTRONIC TECHNOLOGIES, LLC AND SHOULD NOT BE USED WITHOUT WRITTEN PERMISSION

DIMENSION UNITS: MM/IN — SCALE: 5:1
DRWN BY: T. MAHON — DATE: 28/01/03
CHK'D BY: BMAGUIRE — DATE: 28/01/03
APPR BY: JDENNEHY — DATE: 2005/03/11
DRAWING SIZE: C — THIRD ANGLE PROJECTION

molex®

WAFER, FRICTION LOCK
KK (2.54)/.100 FOR (0.64)/.025 SQ. PINS

PRODUCT CUSTOMER DRAWING

| SERIES | MATERIAL NUMBER | CUSTOMER |
|---|---|---|
| 6410 | SEE CHART | GENERAL MARKET |

| DOCUMENT NUMBER | DOC TYPE | DOC PART | SHEET NUMBER |
|---|---|---|---|
| SDAE-6410-N | PSD | 000 | 1 OF 4 |

FORMAT: Eng-tega-master-tb-prod-C
REVISION: C
DATE: 2016/02/04